# TSC x Xerafy RFID On-Metal Label Printing Guide

## Printing and Encoding Metal Skin®

# Contents


About Xerafy Metal Skin® On Metal RFID Labels 1

How To Select Xerafy Metal Skin® On-Metal RFID Labels 1

Xerafy Service Bureau: Labels Ready for Deployment 2

Xerafy On-Metal Labels For Your TSC RFID Printer 3

Printing and Encoding Metal Skin® Mercury 4

Printing and Encoding Metal Skin® Delta 7

Printing and Encoding Metal Skin® Platinum 9

Printing and Encoding Metal Skin® Titanium 15

1-How To Select the Right TSC Printronix Printer 19

2-How To  Set Up Your TSC Printronix T6000e RFID Printer 20

Quick Setup Check 23

Technical Support 23

# About Xerafy Metal Skin® On-Metal RFID Labels

Xerafy Metal Skin® series is a family of printable RFID labels designed for metal and mixed-material assets. The labels combine on-metal RF performance, thermal-transfer printable face stock and flexible 3M industrial adhesive for attachment to flat, curved and irregular surfaces.



Available models differ in dimensions, thickness, read range, chip configuration, printable area and environmental resistance. Select the label according to the asset material and shape, mounting space, required read distance, printer workflow and operating conditions. Verify read performance and adhesion on the actual asset before deployment.

**Learn About Metal Skin® Series**

# How To Select Xerafy Metal Skin® On-Metal RFID Labels

| METAL SKIN® LABEL | SELECT WHEN | TYPICAL ASSETS |
|---|---|---|
| **Mercury** | Longest read range and large printable label | Large metal assets, manufacturing equipment, logistics inventory, and portal reads |
| **Delta** | Prints on most RFID printers | Laptops, servers, network equipment, medical equipment |
| **Platinum** | Best size-to-performance ratio | IT assets, WIP, warehouse and inventory |
| **Titanium** | Smallest on-metal label | Electronic devices, IT assets, tools, handheld equipment |

# Xerafy Service Bureau: Labels Ready for Deployment

Use the Service Bureau when labels need to arrive printed, encoded, serialized and prepared for rollout

1

## Label printing

Asset IDs, SKUs, serial numbers, logos, human-readable text, 1D barcodes, QR codes and Data Matrix codes.

2

## EPC encoding and serialization

Customer-specific EPC values, serialized ranges, password or memory programming where supported by the selected chip.

3

## Printed-data and EPC matching

Match the encoded EPC to the visible asset ID, barcode, QR code or Data Matrix code for controlled data reconciliation.

4

## Deployment-ready supply

Labels can be pre-printed, encoded, serialized and batched before shipment for direct use at the deployment site.

### USE SERVICE BUREAU WHEN

**Field printing is not preferred; serialization must be controlled; visible and RFID data must match; or labels need to arrive ready for deployment.**

### INFORMATION NEEDED FOR A QUOTE

Selected label • Quantity • Artwork/logo • Visible fields • Barcode/QR/Data Matrix rules • EPC list or serialization range • Batching requirements • Application environment

**Ask Our Engineers**

# Xerafy On-Metal Labels For Your TSC RFID Printer

## TSC Industrial RFID Printers

Industrial RFID printers for high-volume RFID labeling: Print and encode.

### T6000e



Available on the 4-inch and 6-inch models, can encode and print on Xerafy on-metal RFID labels

✓ Mercury
✓ Delta
✓ Platinum
✓ Titanium

### MB241R



4-inch-wide thermal printing for durability in high-volume printing

✓ Mercury
✓ Delta
✓ Platinum
✓ Titanium

## TSC Desktop RFID Printer

Compact desktop option for low-volume, on-demand label printing

### TH240R



The 4-inch Desktop Barcode Printers are versatile and flexible for diverse printing requirements.

✓ Delta
✓ Platinum
✓ Titanium

# Printing and Encoding Metal Skin® Mercury

### Longest Read Range

Metal Skin® Mercury labels support applications that require long RFID read range and a large printable area.

Mercury 86 Max: Uses an Impinj chip and provides up to 13 meters of read range on metal.

Mercury 95 Max: Uses an NXP chip and provides long-range performance on metal. It can be used on both metal and plastic surfaces.

Both models support printed asset IDs, serial numbers, barcodes, logos and graphics.

**Typical assets:** industrial equipment, large metal assets, manufacturing inventory, logistics containers and assets tracked through RFID portals.

## Confirm the label model(s) you are using

## Metal Skin® Mercury 86 Max

| Product Name | P/Ns | Size (mm) | Rolls | Orientation |
|---|---|---|---|---|
| **Metal Skin® Mercury 86 Max**<br>Longest Read Range with Impinj | X8654-US011-R6P | 86 x 54 x 1.25 | 150 pcs/roll | <br>54 mm in feed direction |

### Label Specifications and Feed Direction

LABEL SPECIFICATIONS

| | |
|---|---|
| **Label face** | 86 x 54 mm |
| **Thickness** | 1.25 mm |
| **Pitch** | 60 mm |
| **Web width** | 95 mm |
| **Core I.D.** | 76.2 mm / 3 in |
| **Print method** | Thermal transfer |

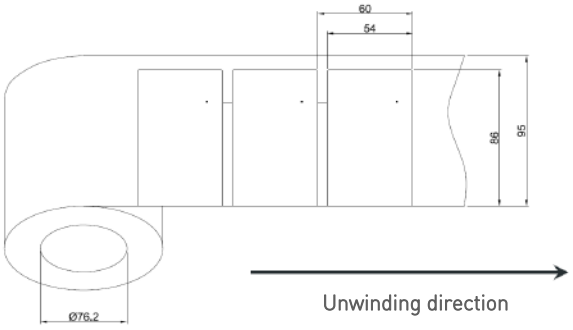


FEED DIRECTION

**86 mm across the we · 54 mm in the feed direction · 60 mm pitch**

### Recommended Printing Area

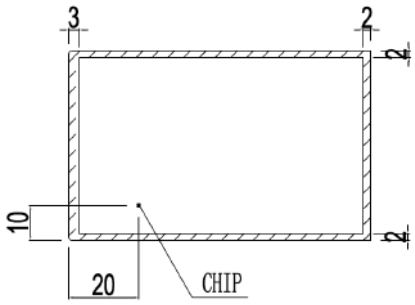


1. Print only within the blank area. Do not print on the shaded area.
2. Avoid printing over the chip location, indicated by the black dot above.

# Metal Skin® Mercury 95 Max

| Product Name | P/Ns | Size (mm) | Rolls | Orientation |
|---|---|---|---|---|
| **Metal Skin® Mercury 95 Max**<br>Longest Read Range with NXP | X9522-US011-U8<br>X9522-EU011-U8 | 95 x 22 x 1.25 | 500 pcs/roll | <br>22 mm in feed direction |

## Label Specifications and Feed Direction

LABEL SPECIFICATIONS

| | |
|---|---|
| **Label face** | 95 x 22 mm |
| **Thickness** | 1.25 mm |
| **Pitch** | 27 mm |
| **Web width** | 100 mm |
| **Core I.D.** | 76.2 mm / 3 in |
| **Print method** | Thermal transfer |

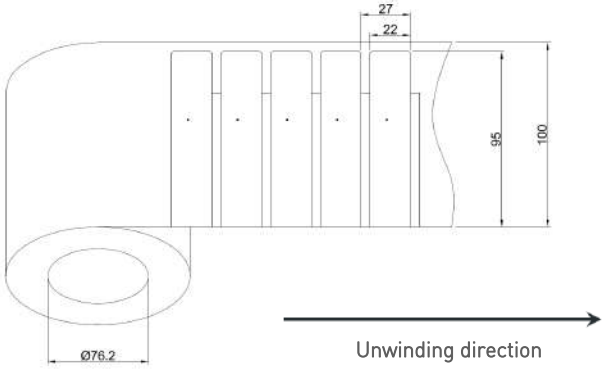


FEED DIRECTION

95 mm across the web · 22 mm in the feed direction · 27 mm pitch

## Recommended Printing Area

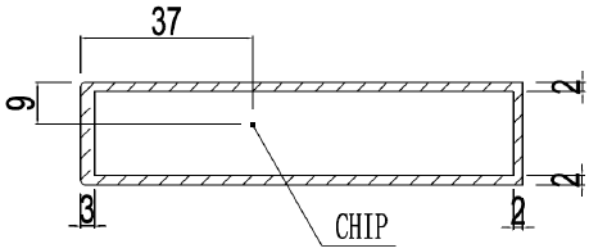


1. Print only within the blank area. Do not print on the shaded area.
2. Avoid printing over the chip location, indicated by the black dot above.

## 3. Printer Settings for Metal Skin® Mercury

Start with Auto Calibration, if it doesn't work, then use Manual Calibration, or contact Xerafy engineers for support.

ETSI Placement and configurations valid for European (ETSI) frequency range, 865-868MHZ

FCC Placement and configurations valid for Frequencies that fall within the FCC range, 902-928MHZ

| Product | | UHF RFID Label Performance & Placement Guide | Printer Settings | | | | | | | Label type: EPC Gen2 v2 | |
|---|---|---|---|---|---|---|---|---|---|---|---|
| # | Label name [Chip] | METAL SKIN MERCURY FEED | Region | Module Power (dBm) Write | Module Power (dBm) Read | Antenna Position | Program Position | Speed | Darkness | Label Size (cm) Width | Label Size (cm) Height |
| 1 | Mercury 86 Max [Impinj Monza R6P] |  | ETSI / FCC | Auto Calibration | | | | | | | |
| 2 | Mercury 95 Max [NXP UCODE 8] |  | ETSI / FCC | Auto Calibration | | | | | | | |

Ask Our Engineers

# Printing and Encoding Metal Skin® Delta

### Prints on Most RFID Printers

Metal Skin® Delta is a 0.4 mm ultra-thin on-metal UHF RFID label designed for printing and encoding on standard industrial RFID printers without a dedicated on-metal printing extension kit.

Its thin, flexible construction improves surface contact on flat, curved, irregular and space-constrained assets. The printable face supports asset IDs, serial numbers, barcodes, logos and human-readable information.

**Typical assets:** laptops and tablets, servers and racks, medical equipment, electronics, tools and industrial components.

## Confirm the label model you are using

## Metal Skin® Delta

| Product Name | P/Ns | Size (mm) | Roll | Orientation |
|---|---|---|---|---|
| **Metal Skin® Delta**<br>Prints on Most RFID Printers | X7030-US100-M830<br>X7030-EU100-M830 | 70 x 30 x 0.40 | 500 pcs/roll<br>3 in core | <br>30 mm in feed direction |

### Label Specifications and Feed Direction

LABEL SPECIFICATIONS

| | |
|---|---|
| **Label face** | 70 x 30 mm |
| **Thickness** | 0.4 mm |
| **Pitch** | 40 mm |
| **Web width** | 75 mm |
| **Core I.D.** | 76.2 mm / 3 in |
| **Print method** | Thermal transfer |

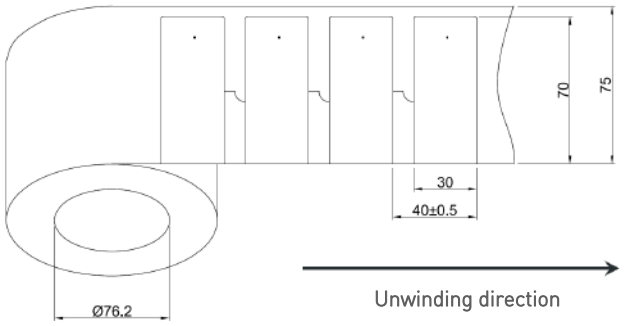


FEED DIRECTION

**70 mm across the web · 30 mm in the feed direction · 40 mm pitch**

### Recommended Printing Area

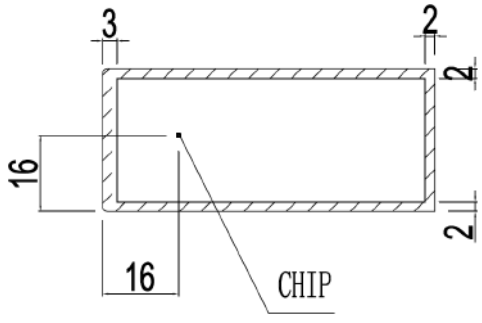


1. Print only within the blank area. Do not print on the shaded area.
2. Avoid printing over the chip location, indicated by the black dot above.

## Printer Settings for Metal Skin® Delta

Start with Auto Calibration, if it doesn't work, then use Manual Calibration, or contact Xerafy engineers for support.

ETSI Placement and configurations valid for European (ETSI) frequency range, 865-868MHZ

FCC Placement and configurations valid for Frequencies that fall within the FCC range, 902-928MHZ

| Product | | UHF RFID Label Performance & Placement Guide | Printer Settings | | | | | | | Label type: EPC Gen2 v2 | |
|---|---|---|---|---|---|---|---|---|---|---|---|
| # | Label name [Chip] | METAL SKIN DELTA FEED | Region | Module Power (dBm) | | Antenna Position | Program Position | Speed | Darkness | Label Size (cm) | |
| | | | | Write | Read | | | | | Width | Height |
| 1 | Delta M830 [Impinj M830] |   | ETSI | Auto Calibration | | | | | | | |
| | | | FCC | | | | | | | | |

Ask Our Engineers

# Printing and Encoding Metal Skin® Platinum

Universal Labeling Solutions

The Metal Skin® Platinum offer the best size-to-performance ratio in the series of durable UHF RFID labels. These universal labeling solutions boast outstanding read ranges on both metal and plastic surfaces, making them ideal for most assets and inventory. Their thin, durable material is optimized for on-demand printing, while the high-performance adhesive ensures secure bonding.

**Typical assets:** IT equipment, manufacturing components, warehouse inventory, industrial equipment and supply chain assets.

## Confirm the label model(s) you are using

## Metal Skin® Platinum

| Product Name | P/Ns | Size (mm) | Rolls | Orientation |
|---|---|---|---|---|
| **Metal Skin® Platinum**<br>Universal Labeling Solutions | X50A3-US011-U9<br>X50A3-EU011-U9 | 58.5 x 19 x 1 | 500 pcs/roll | 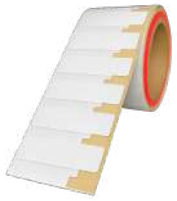<br>19 mm in feed direction |

### Label Specifications and Feed Direction

LABEL SPECIFICATIONS

| | |
|---|---|
| **Label face** | 58.5 x 19 mm |
| **Thickness** | 1 mm |
| **Pitch** | 29 mm |
| **Web width** | 63.5 mm |
| **Core I.D.** | 76.2 mm / 3 in |
| **Print method** | Thermal transfer |

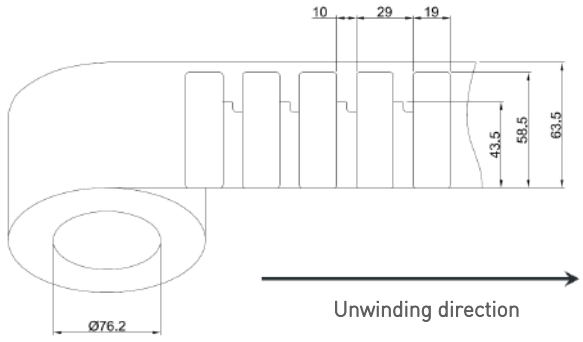


FEED DIRECTION

58.5 mm across the web · 19 mm in the feed direction · 29 mm pitch

### Recommended Printing Area

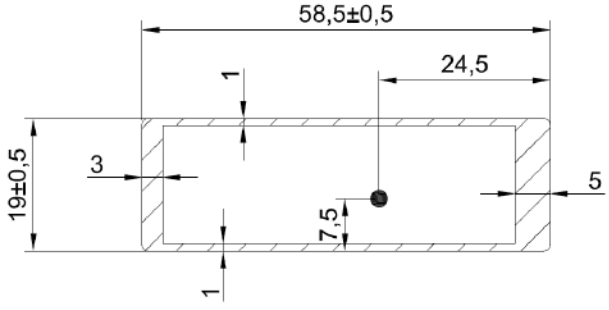


1. Print only within the blank area. Do not print on the shaded area.
2. Avoid printing over the chip location, indicated by the black dot above.

# Metal Skin® Platinum 55 Universal

| Product Name | P/Ns | Size (mm) | Rolls | Orientation |
|---|---|---|---|---|
| **Metal Skin® Platinum 55 Unviersal**<br>For IT Assets | X5515-US011-U8 | 55 x 15 x 1.25 | 500 pcs/roll | <br>15 mm in feed direction |

## Label Specifications and Feed Direction

LABEL SPECIFICATIONS

| | |
|---|---|
| **Label face** | 55 x 15 mm |
| **Thickness** | 1.25 mm |
| **Pitch** | 25.4 mm |
| **Web width** | 60 mm |
| **Core I.D.** | 76.2 mm / 3 in |
| **Print method** | Thermal transfer |

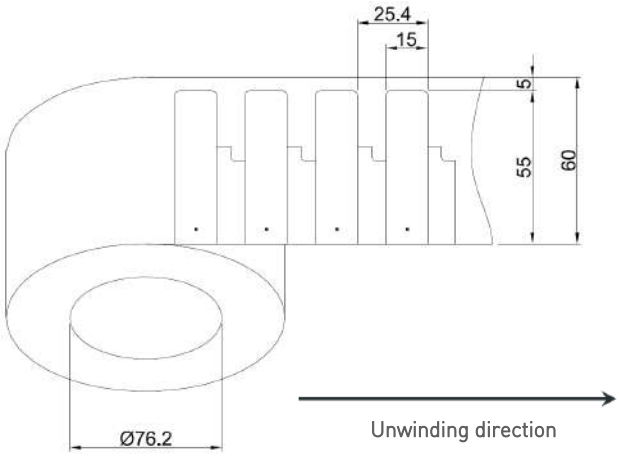


FEED DIRECTION

55 mm across the web · 15 mm in the feed direction · 25.4 mm pitch

## Recommended Printing Area

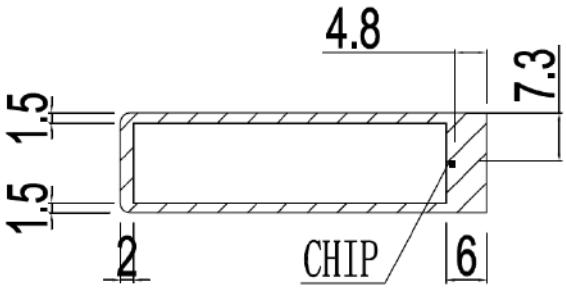


1. Print only within the blank area. Do not print on the shaded area.
2. Avoid printing over the chip location, indicated by the black dot above.

# Metal Skin® Platinum 60 Max

| Product Name | P/Ns | Size (mm) | Rolls | Orientation |
|---|---|---|---|---|
| **Metal Skin® Platinum 60 Max**<br>Extended Read Range | X6025-US011-U8 | 60 x 25 x 1 | 500 pcs/roll | <br>25 mm in feed direction |

## Label Specifications and Feed Direction

LABEL SPECIFICATIONS

| | |
|---|---|
| **Label face** | 60 x 25 mm |
| **Thickness** | 1 mm |
| **Pitch** | 35 mm |
| **Web width** | 65 mm |
| **Core I.D.** | 76.2 mm / 3 in |
| **Print method** | Thermal transfer |

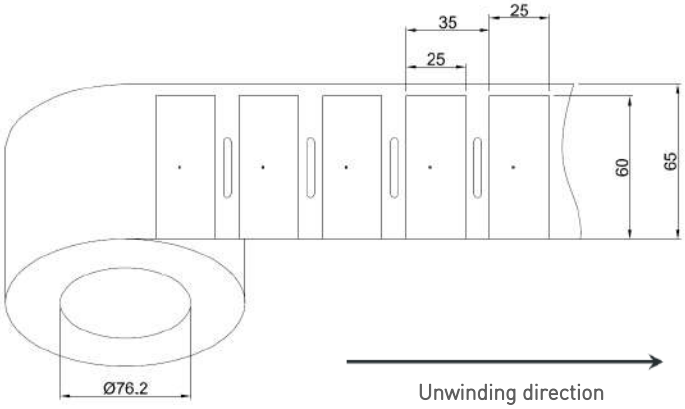


FEED DIRECTION

60 mm across the web · 25 mm in the feed direction · 35 mm pitch

## Recommended Printing Area

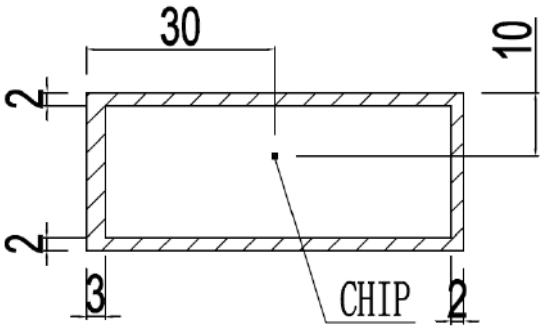


1. Print only within the blank area. Do not print on the shaded area.
2. Avoid printing over the chip location, indicated by the black dot above.

# Metal Skin® Platinum 60 Tamper

| Product Name | P/Ns | Size (mm) | Rolls | Orientation |
|---|---|---|---|---|
| **Metal Skin® Platinum 60 Tamper**<br>Tamper-Evident Labeling | X6025-UST11-R6P<br>X6025-EUT11-R6P | 60 x 25 x 1 | 500 pcs/roll | <br>25 mm in feed direction |

## Label Specifications and Feed Direction

LABEL SPECIFICATIONS

| | |
|---|---|
| **Label face** | 60 x 25 mm |
| **Thickness** | 1.25 mm |
| **Pitch** | 35 mm |
| **Web width** | 65 mm |
| **Core I.D.** | 76.2 mm / 3 in |
| **Print method** | Thermal transfer |

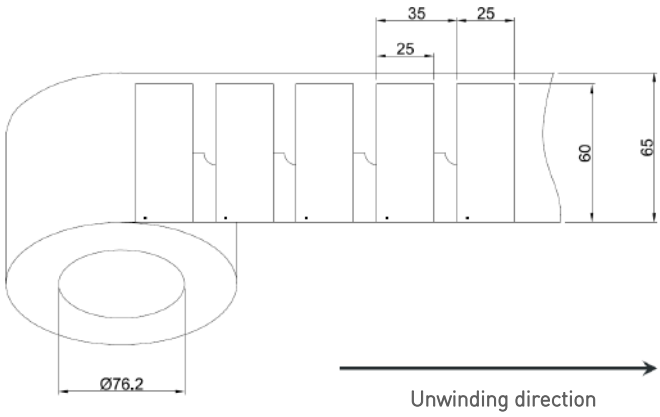


FEED DIRECTION

60 mm across the web · 25 mm in the feed direction · 35 mm pitch

## Recommended Printing Area

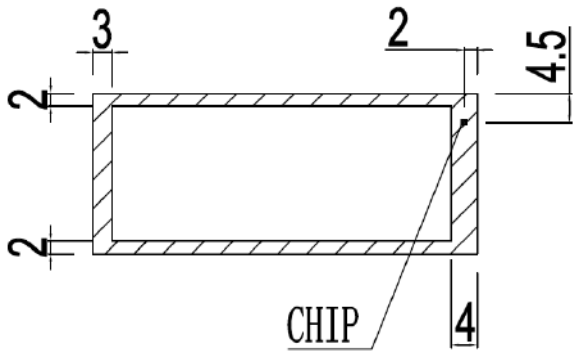


1. Print only within the blank area. Do not print on the shaded area.
2. Avoid printing over the chip location, indicated by the black dot above.

# Metal Skin® Platinum 64 Slim

| Product Name | P/Ns | Size (mm) | Rolls | Orientation |
|---|---|---|---|---|
| **Metal Skin® Platinum 64 Slim**<br>For Slim Labeling | X6406-US011-U8<br>X6406-EU011-U8 | 64 x 6 x 1 | 500 pcs/roll | <br>6 mm in feed direction |

## Label Specifications and Feed Direction

LABEL SPECIFICATIONS

| | |
|---|---|
| **Label face** | 64 x 6 mm |
| **Thickness** | 1 mm |
| **Pitch** | 25 mm |
| **Web width** | 70 mm |
| **Core I.D.** | 76.2 mm / 3 in |
| **Print method** | Thermal transfer |

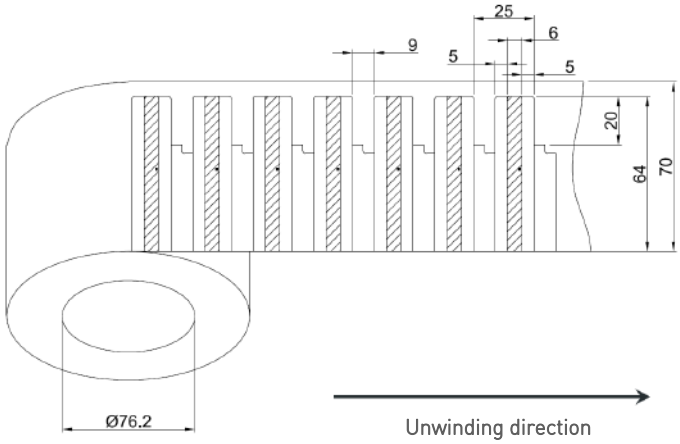


FEED DIRECTION

64 mm across the web · 25 mm in the feed direction · 35 mm pitch

## Recommended Printing Area

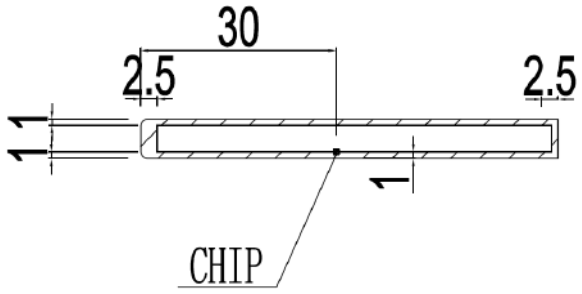


1. Print only within the blank area. Do not print on the shaded area.
2. Avoid printing over the chip location, indicated by the black dot above.

## Printer Settings for Metal Skin® Platinum

Start with Auto Calibration, if it doesn't work, then use Manual Calibration, or contact Xerafy engineers for support.

ETSI Placement and configurations valid for European (ETSI) frequency range, 865-868MHZ

FCC Placement and configurations valid for Frequencies that fall within the FCC range, 902-928MHZ

| Product | | UHF RFID Label Performance & Placement Guide | Printer Settings | | | | | | | Label type: EPC Gen2 v2 | |
|---|---|---|---|---|---|---|---|---|---|---|---|
| # | Label name [Chip] | METAL SKIN PLATINUM FEED | Region | Module Power (dBm) | | Antenna Position | Program Position | Speed | Darkness | Label Size (cm) | |
| | | | | Write | Read | | | | | Width | Height |
| 1 | **Platinum** [NXP UCODE 9] |  | **Auto Calibration** | | | | | | | | |
| 2 | **Platinum 55 Universal** [NXP UCODE 8] |  | **Auto Calibration** | | | | | | | | |
| 3 | **Platinum 60 Max** [NXP UCODE 8] |  | **Auto Calibration** | | | | | | | | |
| 4 | **Platinum 60 Tamper** [Impinj Monza R6P] |  | **Auto Calibration** | | | | | | | | |
| 5 | **Platinum 64 Slim** [NXP UCODE 8] |  | **Auto Calibration** | | | | | | | | |

**Ask Our Engineers**

# Printing and Encoding METAL SKIN® Titanium

### Smallest RFID labels

The Metal Skin® Titanium are the smallest in Xerafy's series of durable UHF RFID labels, delivering superior performance for applications where size is critical.

Designed for versatility, they operate effectively both on-metal and off, offering a cost-effective RFID tracking solution with their industry-strength adhesives.

**Typical assets:** electronic devices, IT equipment, medical supplies, handheld equipment, tools and other small, high-value assets.

## Confirm the label model(s) you are using

## Metal Skin® Titanium

| Product Name | P/Ns | Size (mm) | Rolls | Orientation |
|---|---|---|---|---|
| **Metal Skin® Titanium M830**<br>Smallest Label with Gen2X Accuracy | X5220-US011-M830<br>X5220-EU011-M830 | 45 x 5.6 x 1 | 500 pcs/roll | <br>5.6 mm in feed direction |

### Label Specifications and Feed Direction

LABEL SPECIFICATIONS

| | |
|---|---|
| **Label face** | 45 x 5.6 mm |
| **Thickness** | 1 mm |
| **Pitch** | 22 mm |
| **Web width** | 47 mm |
| **Core I.D.** | 76.2 mm / 3 in |
| **Print method** | Thermal transfer |

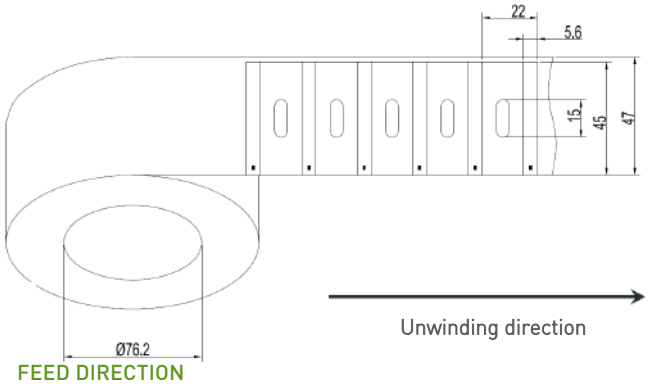


FEED DIRECTION

45 mm across the web · 5.6 mm in the feed direction · 22 mm pitch

### Recommended Printing Area

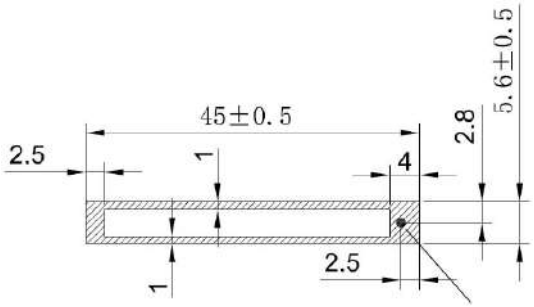


1. Print only within the blank area. Do not print on the shaded area.
2. Avoid printing over the chip location, indicated by the black dot above.

# Metal Skin® Titanium 30 Smallest

| Product Name | P/Ns | Size (mm) | Rolls | Orientation |
|---|---|---|---|---|
| **Metal Skin® Titanium 30 Smallest**<br><br>Smallest On-Metal UHF RFID Label | X3006-US011-U9xe<br>X3006-EU011-U9xe | 30 x 6 x 1 | 500 pcs/roll | <br>6 mm in feed direction |

## Label Specifications and Feed Direction

LABEL SPECIFICATIONS

| | |
|---|---|
| **Label face** | 30 x 6 mm |
| **Thickness** | 1 mm |
| **Pitch** | 24 mm |
| **Web width** | 32 mm |
| **Core I.D.** | 76.2 mm / 3 in |
| **Print method** | Thermal transfer |

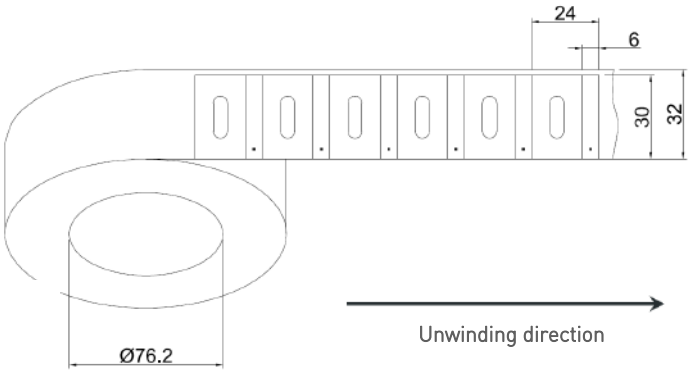


FEED DIRECTION

30 mm across the web · 6 mm in the feed direction · 24 mm pitch

## Recommended Printing Area

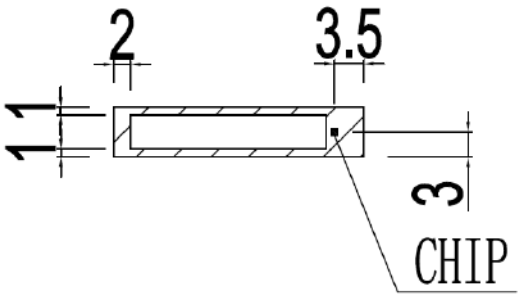


1. Print only within the blank area. Do not print on the shaded area.
2. Avoid printing over the chip location, indicated by the black dot above.

# Metal Skin® Titanium 25 HF

| Product Name | P/Ns | Size (mm) | Rolls | Orientation |
|---|---|---|---|---|
| **Metal Skin® Titanium 25 HF**<br>Compact Label for HF/NFC Tracking | X2525-HF011-NTAG213 | ø 25 x 1 | 1500 pcs/roll | <br>25 mm in feed direction |

## Label Specifications and Feed Direction

LABEL SPECIFICATIONS

| | |
|---|---|
| **Label face** | ø 25 mm |
| **Thickness** | 0.45 mm |
| **Pitch** | 28.787 mm |
| **Web width** | 35 mm |
| **Core I.D.** | 76.2 mm / 3 in |
| **Print method** | Thermal transfer |

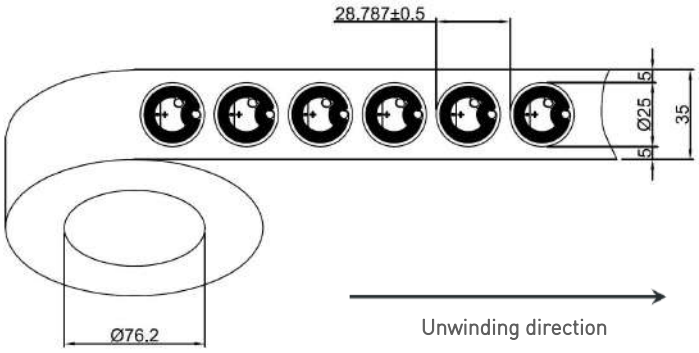


FEED DIRECTION

25 mm across the web · 25 mm in the feed direction · 28.787 mm pitch

## Recommended Printing Area

1. Send your printout to Xerafy expert, we'll help you assess its printability on Titanium 25 HF.

## Printer Settings for Metal Skin® Titanium

Start with Auto Calibration, if it doesn't work, then use Manual Calibration, or contact Xerafy engineers for support.

ETSI Placement and configurations valid for European (ETSI) frequency range, 865-868MHZ

FCC Placement and configurations valid for Frequencies that fall within the FCC range, 902-928MHZ

| Product | | UHF RFID Label Performance & Placement Guide | Printer Settings | | | | | | | Label type: EPC Gen2 v2 | |
|---|---|---|---|---|---|---|---|---|---|---|---|
| # | Label name [Chip] | METAL SKIN TITANIUM FEED | Region | Module Power (dBm) Write | Module Power (dBm) Read | Antenna Position | Program Position | Speed | Darkness | Label Size (cm) Width | Label Size (cm) Height |
| 1 | **Titanium M830** [Impinj M830] |  | ETSI | Auto Calibration | | | | | | | |
| | | | FCC | | | | | | | | |
| 2 | **Titanium 30 Smallest** [NXP UCODE 9xe] |  | ETSI | Auto Calibration | | | | | | | |
| | | | FCC | | | | | | | | |
| 3 | **Titanium 25 HF** [NXP NTAG213] |  | ETSI | Auto Calibration | | | | | | | |
| | | | FCC | | | | | | | | |

**Ask Our Engineers**

# 1-How To Select the Right TSC Printronix Printer

## To select the correct RFID printer for working with on-metal tags, such as the Xerafy METAL SKIN series, several factors need to be considered:

A) The printer should have an encoding antenna above the label path to ensure reliable communication with the tag. Traditionally, RFID printers had the encoding antenna below the label path, but this is problematic when it comes to working with on-metal tags. Make sure the printer you select has an above-path encoding antenna, such as TSC Printronix's T6000e and T4000 series printers.

B) The second factor to consider is media handling and media tolerance specs. Both the T6000e and T4000 have superb media handling, developed with on-metal tags in mind to accommodate the deep gaps, abrupt edges and even backfeed in the event of voiding a bad tag. For the media tolerance specs, the T6000e has a maximum media thickness spec of 2.2mm, whereas the T4000 has a maximum media thickness spec of 1.2mm, so not all METAL SKIN tags will work with the T4000. Make sure to check the various tags' thicknesses before selecting your printer:



| Model | | T6000e RFID 4" | T6000e RFID 6" | T4000 RFID | T800 RFID | PEX-2000 RFID 4" | PEX-2000 RFID 6" | Alpha-40L RFID |
|---|---|---|---|---|---|---|---|---|
| Printer Type | | Industrial | Industrial | Industrial | Desktop | Print Engine | Print Engine | Mobile |
| Duty Cycle | | 10,000 labels / day | 10,000 labels / day | 5,000 labels / day | 2,500 labels / day | 20,000+ labels / day | 20,000+ labels / day | [illegible] |
| RFID System | Encoding | RAIN / UHF | | | | | | |
| | Standard | GS1 EPC Gen2 / ISO 18000-63 | | | | | | |
| | Antenna | Internal adjustable, external fixed | External fixed | External fixed | Internal adjustable | Internal fixed | Internal fixed | External fixed |
| | Printer Languages (RFID Encoding) | PGL, ZGL, STGL, MGL | PGL, ZGL, STGL, MGL | PGL, ZGL, STGL, MGL | PGL, ZGL, STGL, MGL | TSPL-EZD, TSPL-EZS | TSPL-EZD, TSPL-EZS | TSPL-EZC |
| RFID Labels | Types | Standard / on-metal / other | Standard / on-metal / other | Standard / on-metal / other | Standard | Standard / other | | Standard (DT) |
| | Max. Media Thickness | 2.2mm (0.088") | 2.2mm (0.088") | 1.2mm (0.05") | Standard RFID | 1.2mm (0.05") | | Standard RFID |
| | Label Pitch | Down to 15.9mm (0.625") | | | | | | |
| | Calibration | Automatic | | | | | | |
| Chip (IC) / Inlays | | Chips: Support for all mainstream chips and many new advanced chips<br>Inlays: Support for all common inlay designs<br>Check our RFID Solution webpage for the latest list of validated chips and inlays | | | | | | |
| RFID Data Validation | | Encoding failures: Full / partial label overstrike (depends on label length)<br>RFID label counter: Tracks good/bad labels | | | | Encoding failures: Full label overstrike<br>RFID label counter: Tracks good/bad labels | | |
| Print Resolution | | 203dpi, 300dpi, 600dpi | 203dpi, 300dpi | 203dpi, 300dpi | 203dpi, 300dpi | 203dpi, 300dpi, 600dpi | 203dpi, 300dpi | 203dpi |
| Max. Print Speed | | 14ips@203dpi, 12ips@300dpi, 6ips@600dpi | 12ips@203dpi, 10ips@300dpi | 10ips@203dpi, 7ips@300dpi | 8ips@203dpi, 6ips@300dpi | 18ips@203 dpi, 14ips@300 dpi, 6ips@600 dpi | 14ips@203dpi, 12ips@300dpi | Up to 5ips @203dpi |
| Media Print Width | | 104mm (4.1") | 166mm (6.55") | 104mm (4.1") | 104mm (4.1") | 104mm (4.1") | 168 mm (6.61") | 104mm (4.1") |
| Media Handling | | Tear, cutter, peel/ rewind*, batch/rewind* | Tear, cutter | Tear, cutter | Tear, peel**, cutter** | Peel, tear | Peel, tear | Tear |

Note: This spec is based on label / tag thickness + the thickness of the release liner. Release liner thickness is normally 0.1 0.15mm thick.

# 2-How To  Set Up Your TSC Printronix T6000e RFID Printer

Note on tag roll and ribbon "wind" (orientation):  Label printers are generally designed to work with various wind directions for both the labels / tags and the ribbon, however when working with RFID labels / tags, it is highly recommended to use the printer manufacturer's preferred orientations for both.  Xerafy METAL SKIN tags, when used with TSC Printronix RFID printers, should be wound with the printable surface "out" and the bulk of the tag material on the inboard side of the printer as shown here:

**The following photographs will guide you in properly loading ribbon and RFID media (label rolls) into the printer.**



If you prefer to watch the video guide, click the button below.

**Watch Video**



The ribbon should be wound with coated side (the ink) out.  A resin or wax-resin ribbon is recommended.

With the tag and ribbon rolls correctly wound, it's time to load the media (collective term for the tags and ribbon):



A) Open the cover



B) Open the printhead mechanism



**C) Load the Xerafy METAL SKIN tags. Notes:**

a) If your TSC Printronix RFID printer has an upper media-feed guide bar, it is recommended to not use this bar with stiffer, thicker RFID tags such as the Xerafy METAL SKIN series.

b) Make sure to align all other media-feed guides gently against the tags.

c) Both the TSC Printronix T6000e and T4000 models have a magnetic front panel which can be opened to more easily feed the labels under the encoding antenna. Make sure to close the magnetic panel before operation.

## Auto RFID Calibration

With the tags and ribbon correctly loaded, it is now time to calibrate the printer for the tags in use. When working with RFID tags, there are two calibrations that must be performed: standard, non-RFID media length calibration and RFID calibration. Basic printer settings, such as "page separator" (gap or black mark), printer speed, and "intensity" (often referred to as "darkness") must also be set.

TSC Printronix RFID printers have simple Wizards to guide users through the calibrations and basic printer settings. This guide utilizes these Wizards for printer setup.

## Non-RFID Media Length Calibration

The following photographs will guide you to run the non-RFID media length calibration and RFID calibration.



**If you prefer to watch the video guide, click the button below.**

**Watch Video**




**A) Take the printer offline (green pause button on front panel of printer)**




B) Use the arrow keys to scroll. Scroll to the left to select Wizard, then press the Enter key.

C) Scroll right to select Printer Setup. Hit Enter. If you receive a message that "Enter Switch Locked," press the up and down arrows simultaneously to unlock the Enter key. Pressing the up and down arrows simultaneously is a toggle for locking or unlocking the Enter key.

D) Follow this Wizard through to completion.

Notes: As you have already loaded the tags and ribbon, these steps can be skipped in the Wizard.

The Printer Setup Wizard takes care of basic printer settings and the critical step of non-RFID label calibration.



E) Completion of this Wizard will take you back to the main Wizards selection screen. Scroll right and down to select the RFID Wizard.



F) Run the RFID Wizard. You may skip the Gap/Mark Sensor selection and Auto-Calibrate (the non-RFID label calibration) steps in this Wizard as they were already completed in the Printer Setup Wizard. If you are using a T6000e series 4" print-width printer, you will be asked to configure the Antenna Setting. Default setting is "Internal." For on-metal tags, such as the Xerafy METAL SKIN series, change this to "External." The external encoding antenna is positioned above the tags, which is ideal for encoding on-metal tags.

Note: The key step in this Wizard is RFID Calibrate. Depending on label dimensions and inlay placement, RFID calibration should take between one and five minutes.

G) Upon completion of the RFID Wizard, push the green pause button to take the printer back online. The printer will prompt you to save these settings as a "Configuration." For now, accept the default choice of Save Permanently in Active Config. This step saves the various settings and calibrations you have just completed in what TSC Printronix calls a Configuration. TSC Printronix RFID printers can save up to eight different Configurations, and each can be given a custom name.

# Quick Setup Check

Confirm these four items before starting the printing job.

| | AREA | CHECK | DONE |
|---|---|---|---|
| 1 | Media | **Label roll loaded in the correct direction** | ☐ |
| 2 | Calibration | **Auto Calibration completed successfully** | ☐ |
| 3 | Print | **Print position and barcode quality checked** | ☐ |
| 4 | RFID | **EPC written and read back correctly on industrial RFID printers** | ☐ |

**COMPLETE BEFORE PRINTING**

Proceed after all checks applicable to the selected RFID printer are complete.

# Need Help?

## OFFICIAL TSC PRINTER SUPPORT RESOURCES

| | |
|---|---|
| **T6000e** | https://usca.tscprinters.com/en/products/t6000e-series-4-inch-enterprise-industrial-rfid-printers |
| **MB241R** | https://usca.tscprinters.com/en/products/mb-series-4-inch-performance-industrial-rfid-printer |
| **TH240R** | https://usca.tscprinters.com/en/products/th-series-4-inch-durable-desktop-rfid-printer |
| **All printer support** | https://usca.tscprinters.com/en/downloads |

## XERAFY METAL SKIN® LABEL SUPPORT

For Metal Skin® Label selection, roll orientation or printing guidance, contact our engineers.

**Ask Our Engineers**